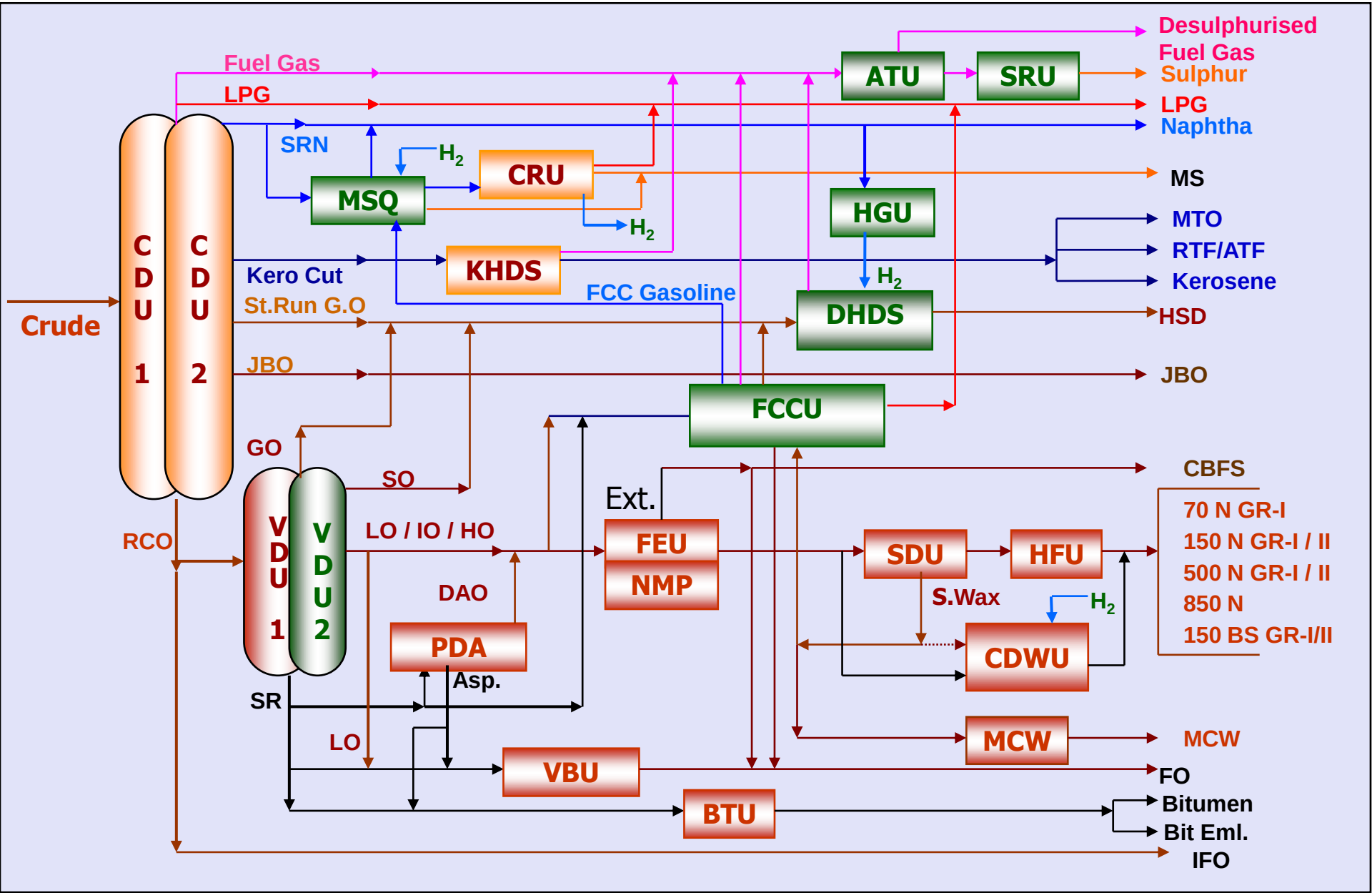BLOCK FLOW DIAGRAM OF HALDIA REFINERY